Bar
Scale: 1"= 1'-0"
Attaches to or Sits against Column C4

All Surfaces are wood paneling showing grain.
Surfaces marked as Light Wood Panel are alighter wood grain finish that rest of the exposed panels of the Bar.

Finish with Semi gloss finish.

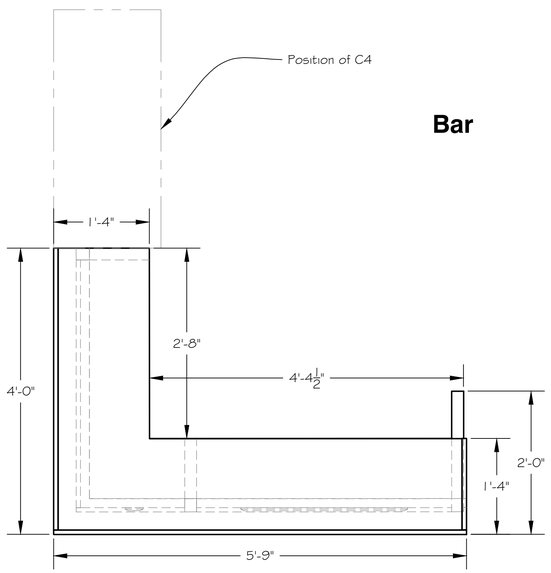

Bar

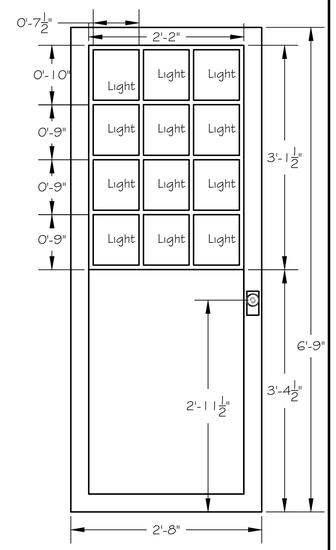

Front Door
Composed of Dark Wood panels as shown.

Window lights are colored glass.

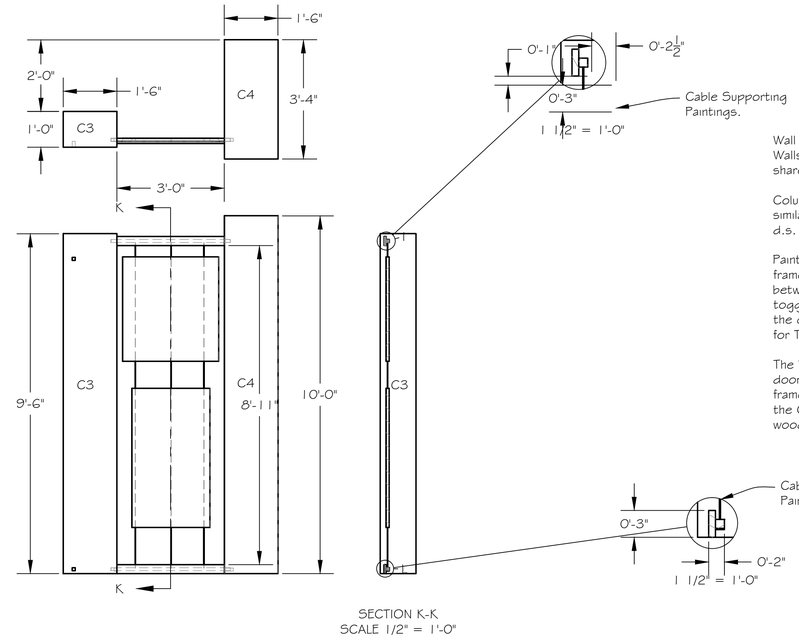

SECTION K-K
SCALE 1/2" = 1'-0"

Wall and Painting Sections
Walls and Painting Sections are supported by shared columns.

Columns are finished with Dark Wood surface similar to bar. on three sides (2 long sides and d.s. short side.

Painting sections are Printed Paintings without frames attached to cable that is stretched between toggles that connect columns. The toggles are colored the same wood finish as the columns. The toggles must be removable for Tartuffe.

The Wall section W3 contains the entrance door. It opens up and off stage. The door frame is the same dark wood finish that is on the Columns. The door is finsihed in a lighter wood. The lights are colored textured glass.

P1 Paintings

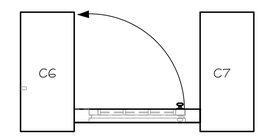

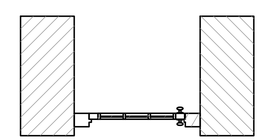

SECTION J-J
SCALE 1/2" = 1'-0"

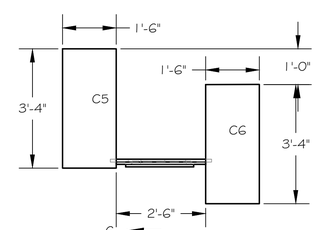

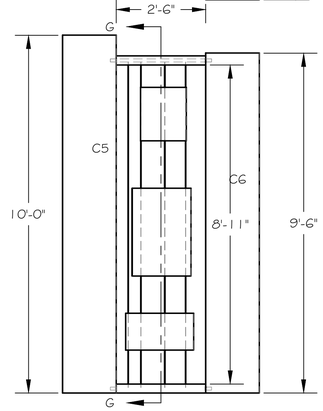

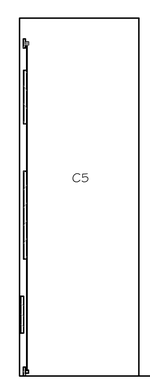

SECTION G-G
SCALE 1/2" = 1'-0"

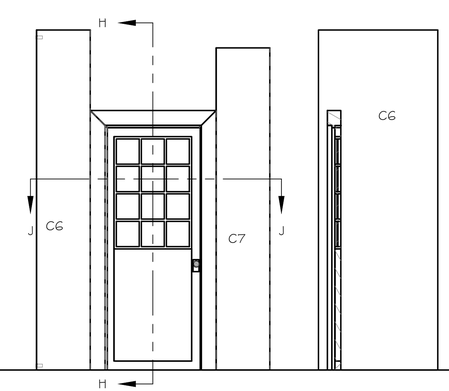

SECTION H-H
SCALE 1/2" = 1'-0"

P2 Paintings

Wall W3

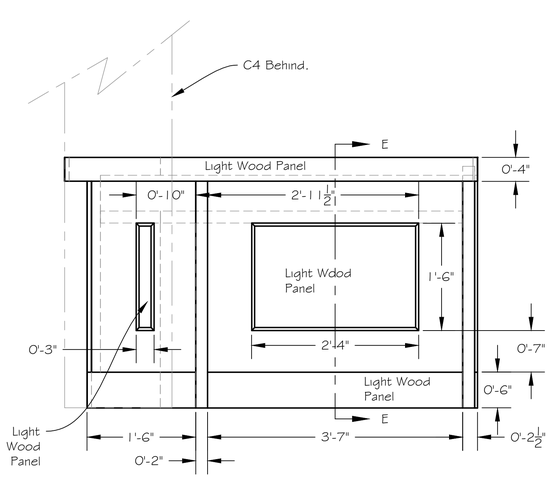

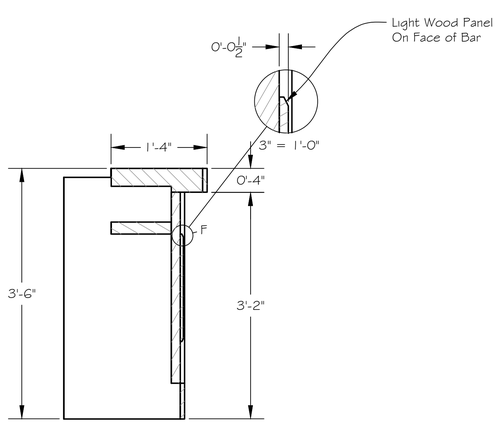

SECTION E-E
SCALE 1" = 1'-0"

This is a representation of design concepts only! The designer takes no responsibility, and herewith disclaims liability, for the erection, engineering and/or use of any component or concept shown on this or any other drawing. It is the responsibility of the vending companies to erect this design using properly engineered and approved materials, components and methods, including but not limited to local building, fire and safety codes, and all applicable O.S.H.A. standards.

All concepts, ideas, and design elements shown on this drawing and any other documentation are the exclusive intellectual property of Scenographix, Ltd., and may only be used for this project. Any other use is prohibited, unless express written permission has been granted by Scenographix, Ltd.

Picasso at the Lapin Agile

Bar and S.R Walls P2, P3 and W3

ACCOUNT EXECUTIVE

DRAWN BY
T. McClellan

DATE
18 December 2014

SCALE:
1/2"=1'-0"

DRAWING NUMBER
4

DRAWING DATA